Leak-Free Load-Control Valve, Size 16

Qmax = 250 l/min [66 gpm], pmax = 420 bar [6000 psi]
leak-proof, two-stage hydraulic, manifold mounting
Series CINDY 16-B-P...

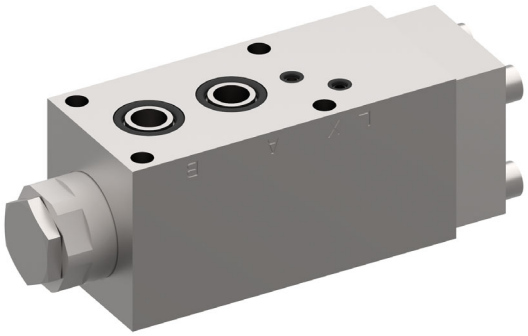

- Two-stage load-control valve and bypass check valve are functionally combined in one coaxial valve assembly
- Leak-free load holding
- Pilot ratio 1:113
- Guaranteed closing force for the load-control assembly → reliable shut-off even with a broken spring
- Various pilot-pressure ranges can be chosen
- Satisfies exacting demands on corrosion protection thanks to zinc-nickel coating
- Various types of pilot control are available
- Pressure relief is independent of return-line pressure
- Low-noise operation thanks to specially shaped control grooves

1 Description

Whenever large loads are to be precisely moved, placed and held, or work access platforms must maintain their position and withstand high forces, then leak-free load-control valves from the CINDY series are the right solution.
Load-control valves in this series prevent hydraulic actuators from running ahead of the available oil supply. In one valve, they combine the functions of load-holding, safety and pipe-rupture protection. Leak-free load-control valves in this series are ideally suited for use in high-pressure applications up to 420 bar (6000 psi). With a variety of optional components, the series can be extended and adapted to the requirements of the system.

2 Symbol

2.1 Manifold-mounting variants

Variant A

Influenced by return-line pressure
(pressure in A is additive to opening pilot pressure).

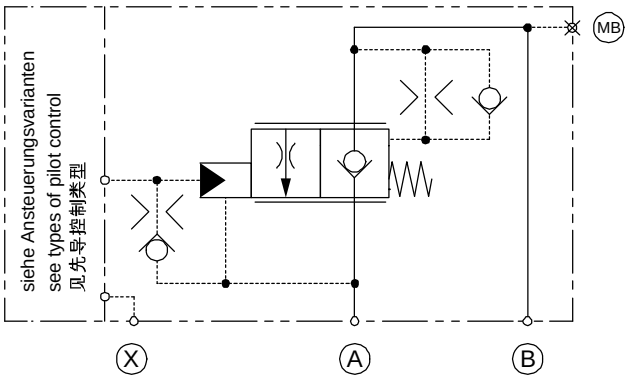

Variant L

Not influenced by return-line pressure
(drain line is required).

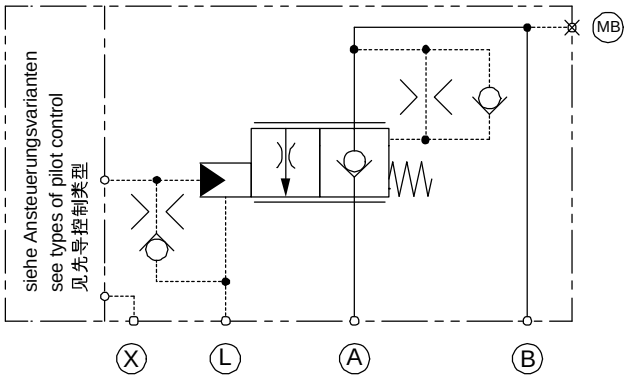

3 Technical data

General characteristics		Description, value, unit
Designation		Leak-Free Load-Control Valve
Design		Leak-proof, two-stage hydraulic, manifold mounting
Size		Size 16
Mounting method		Flange mounting (4x hex. socket-head cap screws with secondary pressure relief valve (SV): M10x100 without secondary pressure relief valve (SV): M10x75 ISO 4762 (DIN 912), – grade 12.9)
Main ports Tank port Control / drain ports Test ports	A, B T X, L MB	∅ 16 mm [∅ .629 inch] (factory standards) ∅ 13 mm [∅ .511 inch] (factory standards) ∅ 4 mm [∅ .157 inch] (factory standards) G 1/4“, ISO 1179-1
Weight		5.0 … 6.9 kg [11.02…15.21 lbs]
Mounting attitude		unrestricted
Ambient temperature range		- 25 °C … +80 °C [-13 °F … +176 °F] (others on application)
Surface corrosion protection		Zinc-nickel coating Mounting screws zinc-flake coated (e.g. with Geomet® finish)

Hydraulic characteristics		Description, value, unit
Maximum operating pressure		420 bar [6000 psi]
Maximum pressure at the flow- or return port A		420 bar [6000 psi]
Maximum pressure at the actuator- / load port B		420 bar [6000 psi]
Maximum pressure at the pilot port X		420 bar [6000 psi]
Maximum flow rate		250 l/min [66 gpm]
Flow direction		A → B, free flow through check valve B → A, controlled flow
Operator type		hydraulic proportional
Opening pilot ratio		1:113
Secondary pressure relief valve	SVA / SVT	120…420 bar [1700…6000 psi] setting is factory-sealed (lower settings on request)
Hydraulic fluid		HL and HLP mineral oil to DIN 51 524; for other fluids, please contact BUCHER
Hydraulic fluid temperature range		- 25 °C … + 80 °C [-13 °F … +176 °F]
Temperature rating of seals	NBR FKM MIL	- 25 °C … + 100 °C [-13 °F … +212 °F] - 20 °C … + 200 °C [-4 °F … +392 °F] - 55 °C … + 80 °C [-67 °F … +176 °F]

Hydraulic characteristics	Description, value, unit
Viscosity range	2.8…1500 mm^2/s (cSt), recommended 10…380 mm^2/s (cSt)
Minimum fluid cleanliness Cleanliness class to ISO 4406 : 1999	Class 20/17/14

4 Construction and function

The functions of the control assembly are subdivided into the following positions:

4.1 Neutral position

The load pressure and the compression spring act on the control spool in the closing direction. The valve is closed with no leakage.

4.2 Lifting (flow direction from A → B)

The pump pressure at port A opens the valve against the “light” compression spring and the load. The pilot spool and control spool move together in the opening direction. Oil flows from A → B and the valve functions as a check valve.

4.3 Lowering (flow direction from B → A)

The pilot pressure at port X acts on the pilot piston and against the control springs. The pilot spool opens. As a result, the load pressure B is discharged to port A via the metering grooves in the pilot spool. The progressive characteristic of the pre-opening phase ensures that lowering begins smoothly and without jerks.
If the pilot pressure at port X is increased, the pilot spool opens further. The change in the pressure conditions at the control spool means that it follows the pilot spool in the opening direction. The oil flows from B → A.

Neutral position
(Symbol for 4.1)

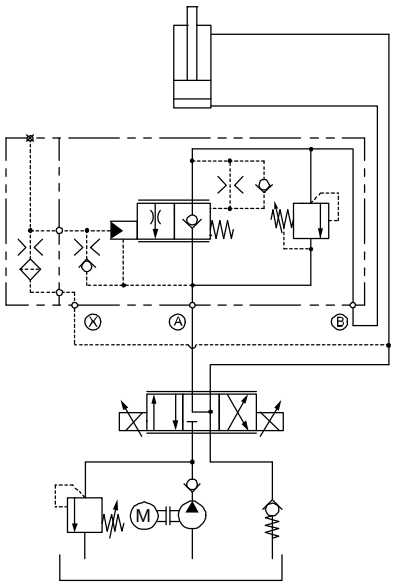

Lifting (A → B)
(Symbol for 4.2)

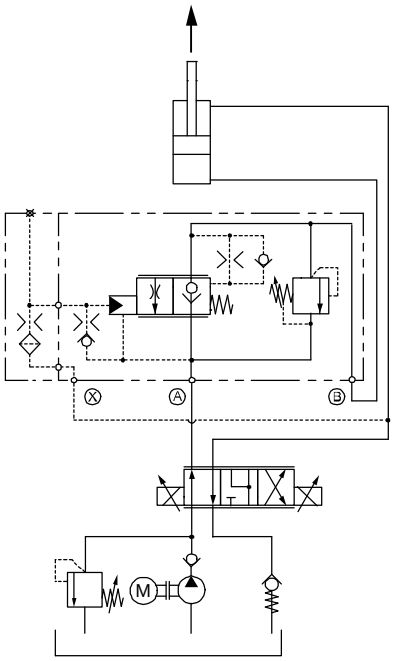

Lowering (B → A)
(Symbol for 4.3)

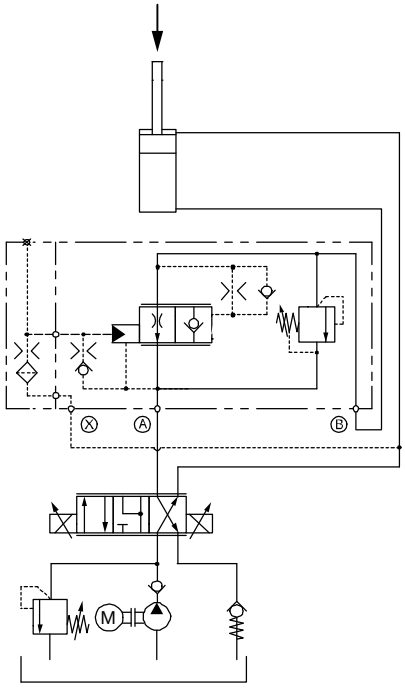

4.4 Types of pilot control

Cover types / applications	Type “G“	Type “D“	Type “K“	Type “H“
Cylinder application (external pilot signal)	✓✓	×	×	✓
Cylinder application (pilot signal from opposite line)		✓✓		
Motors / Winches	×		✓✓	×
Motors for slewing drives	×	✓✓	×	×

Explanation of symbols: ✓✓ = normal ✓ = possible × = not possible

4.4.1 Standard damping cover, type “G“

Pilot control type “G“ is recommended for external control, or with low-oscillation applications. This control cover can only be damped with an inlet orifice. Stroke-dependent damping is not possible with this cover.

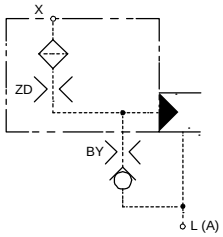

4.4.2 Stroke-dependent damping cover, type “D“

The type “D“ cover is recommended for handling pilot signals that come from the opposite actuator line and for applications that are susceptible to oscillations. Thanks to the pilot piston's stroke-dependent damping system, oscillation-prone applications can be started in a very stable manner. The starting pressure peak is reduced because in the starting zone the valve responds quickly to the pilot signal.

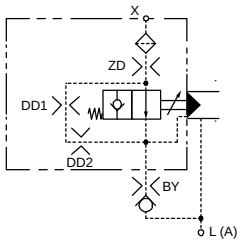

4.4.3 Stroke-dependent damping cover with metering grooves, type “K“

The stroke-dependent damping cover with metering grooves, type “K“, is recommended for applications that are susceptible to oscillations, such as hydraulic motors (e.g. winches).

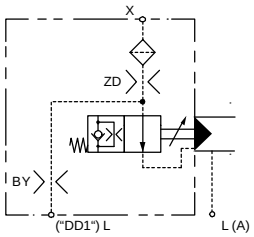

4.4.4 Hydromechanical stroke-limiting cover, type “H“

With the type “H“ pilot control, the stroke is limited in order to achieve a particular flow rate or speed. This reduces the valve resolution.

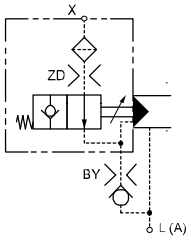

General:

The series-connection of the orifices allows the opening time, the closing time, the start of opening, and the full extent of opening to be matched to the requirements of the application.

4.5 Secondary pressure relief valve (SV)

To protect the actuator from overload, a version that includes a secondary pressure relief valve is available. A direct-acting pressure relief valve, type SVT or SVA, for the whole rated flow.

IMPORTANT!: With open-centre directional valves, make sure that the valve has an adequate flow rating. If the security seals or other security elements are removed, all Bucher Hydraulics' liabilities become null and void.

4.5.1 Direct-acting secondary pressure relief valve Variant: SVA (B → A)

The SVA direct-acting secondary pressure relief valve is connected directly to the load port B. When the pressure setting is reached, the relief spool opens a flow path to port A, the return line connection.
The relief setting is locked and sealed with a special lock nut.

Circuit example for SVA (B → A)
for directional valves with open-centre spool

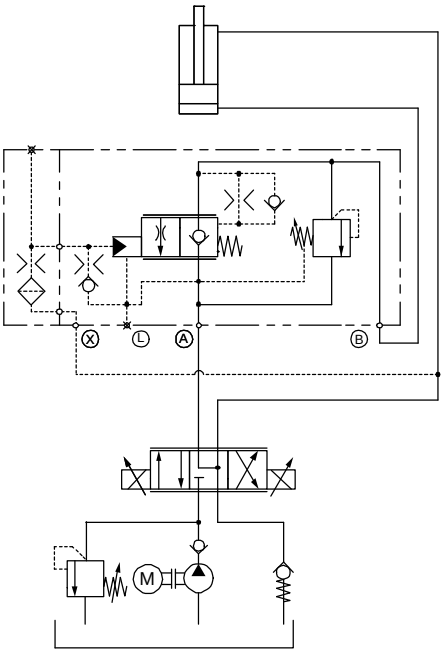

ATTENTION!:
With body variant A, the return-line pressure is additive 1:1 to the pressure setting (see Fig. at left)!
With body variant L, the spring chamber in the pressure relief valve is drained to tank, so the return-line pressure does not affect the pressure setting.

4.5.2 Direct-acting secondary pressure relief valve Variant: SVT (B → T)

The SVT direct-acting secondary pressure relief valve is connected to the load port B. When the pressure setting is reached, the relief spool opens and creates a connection to the tank port T.
The relief setting is locked and sealed with a special lock nut.
This model is used when the open-centre spool cannot handle the full flow rate, or when the application causes the load to move.

Circuit example for SVT (B → T)
for directional valves with closed-centre spool

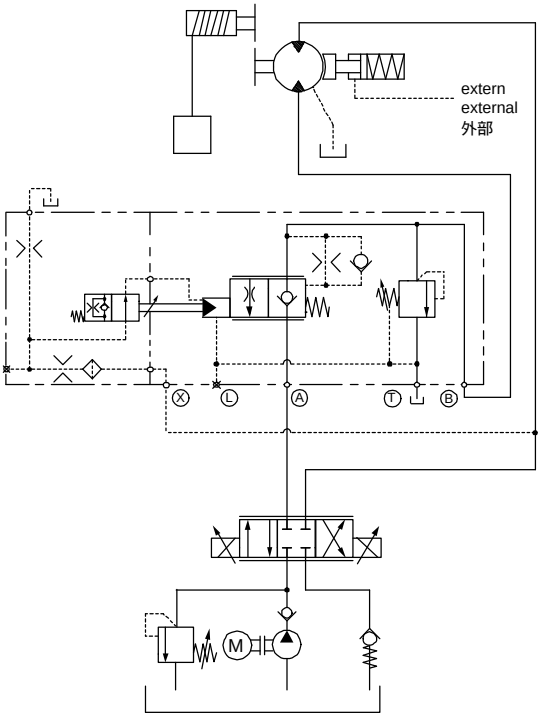

ATTENTION!: In the case of a tank-line preload, the pressure is additive 1:1 to the pressure setting!

4.5.3 Overview table for secondary pressure relief valves

IMPORTANT!: Please refer to the technical design sheets 300-D-9050101 for cylinder applications and 300-D-9050102 for motor applications.

	SV variants / spool variants	SVA ** Back-pressure dependent (CINDY 16-B-P__-S___-A)	SVA Back-pressure independent (CINDY 16-B-P__-S___-L)	SVT Back-pressure dependent (CINDY 16-B-P__-S___-A)	SVT *** Back-pressure independent (CINDY 16-B-P__-S___-L)
Cylinder applications	Directional valve spool with open centre	✓	✓✓		
	Directional valve spool with closed centre	×		✓	✓
Motor applications *	Directional valve spool with open centre	✓	✓✓		
	Directional valve spool with closed centre	×		✓	✓

Explanation of symbols: ✓✓ = normal ✓ = possible × = not possible

Supplements / Notes:

* In motor applications, to prevent cavitation at the hydraulic motor it is essential to ensure that sufficient oil is always available at the supply side under all operating conditions!

** Return-line pressure from line A is additive to the secondary pressure relief valve's pressure setting!

*** Leakage/drain gallery (L) is internally connected within the body to the tank gallery (T)!

5 Performance graphs

measured with oil viscosity 33 mm²/s (cSt)

Δp = f (Q) Pressure drop - Flow rate characteristic
Lifting A → B

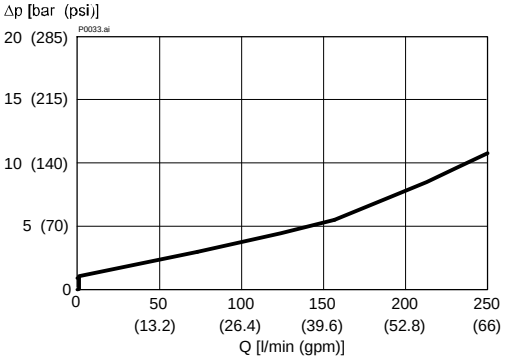

Δp = f (Q) Pressure drop - Flow rate characteristic
Lowering B → A

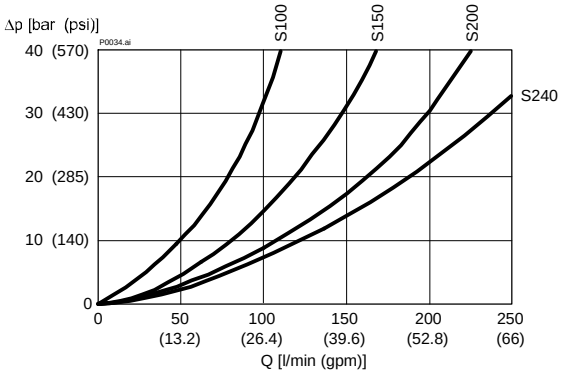

p = f (Q) Pressure - Flow rate characteristic
Secondary pressure relief valve SVA / SVT

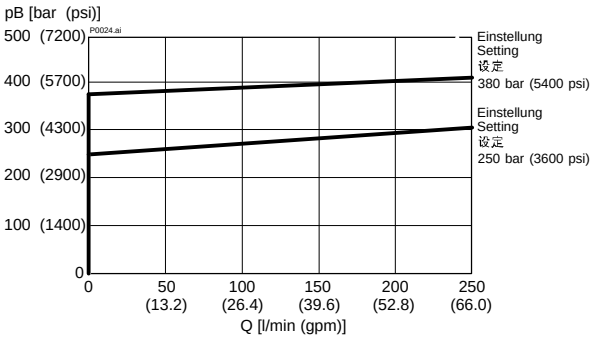

6 Available modules

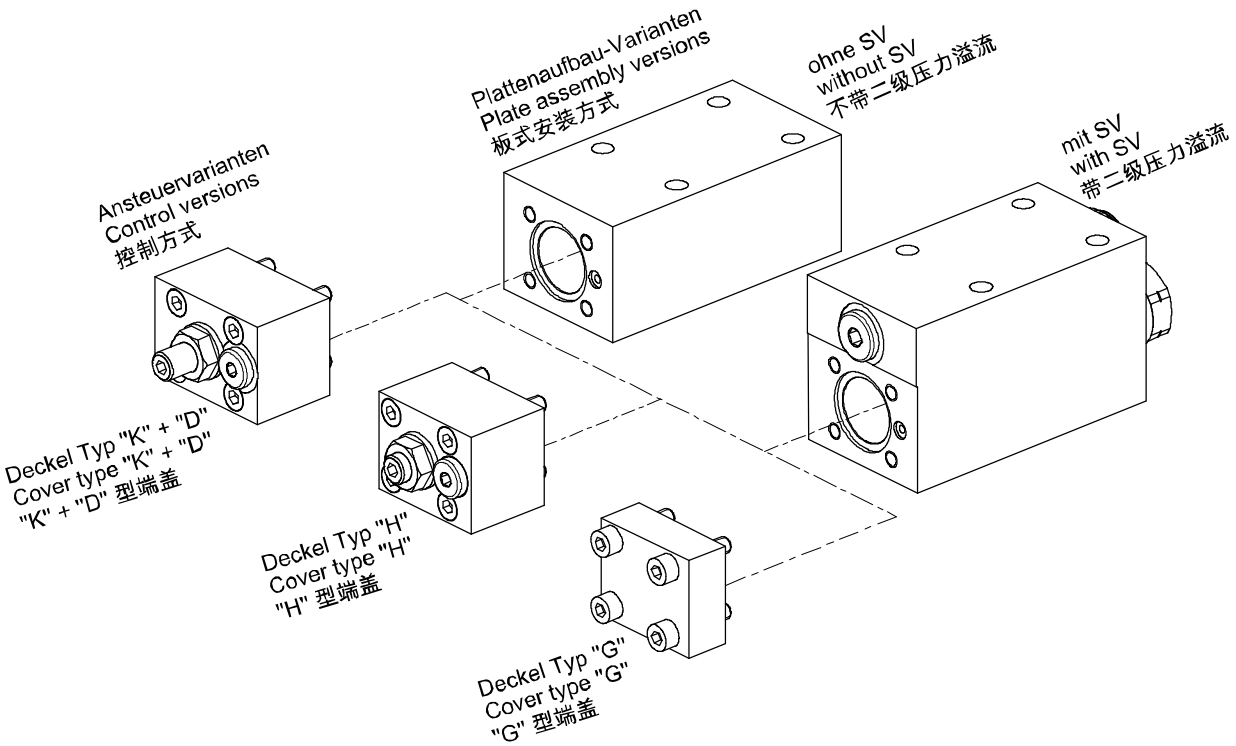

BUCHER
hydraulics

7 Dimensions & sectional view

7.1 Body and control versions

Beispiel für die Masseinheit:
Example for the dimensional units:
尺寸单位举例:
0.79 = 0.79 mm millimeter
[.031] = 0.031 ″ inch

Standarddämpfungsdeckel Typ "G"
Standard damping cover type "G"
"G" 型标准阻尼功能端盖

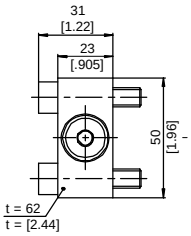

Hubabhängiger Dämpfungsdeckel Typ "D"
Hubabhängiger Kerbendämpfungsdeckel Typ "K"
Stroke-dependent damping cover type "D"
Stroke-dependent damping cover with metering grooves type "K"
"D" 型行程相关阻尼功能端盖
"K" 型行程相关阻尼功能端盖，带沟槽

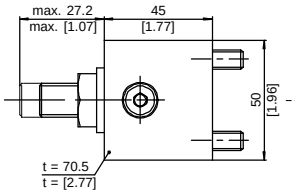

Hydromechanischer Hubbegrenzungsdeckel Typ "H"
Hydromechanical stroke-limiting cover type "H"
"H" 型机-液行程限制功能端盖

* = werkseitige Einstellung
* = factory setting
* = 工厂设定

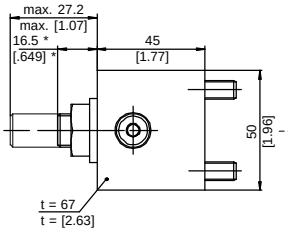

Ohne Sekundärdruckbegrenzungsventil (SVA / SVT)
Without secondary pressure relief valve (SVA / SVT)
不带溢流阀 (SVA / SVT)

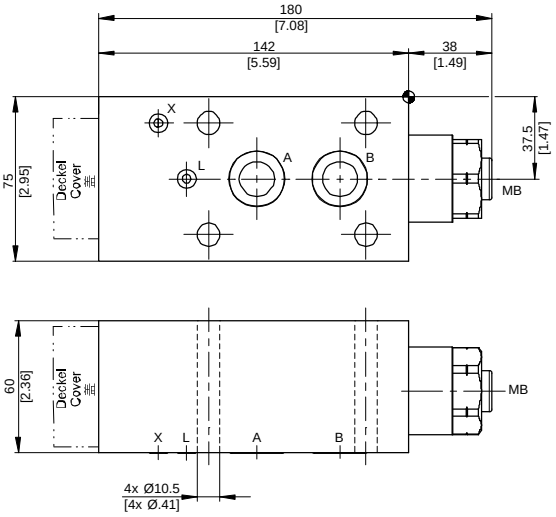

Mit Sekundärdruckbegrenzungsventil (SVA / SVT)
With secondary pressure relief valve (SVA / SVT)
带二级溢流阀 (SVA / SVT)

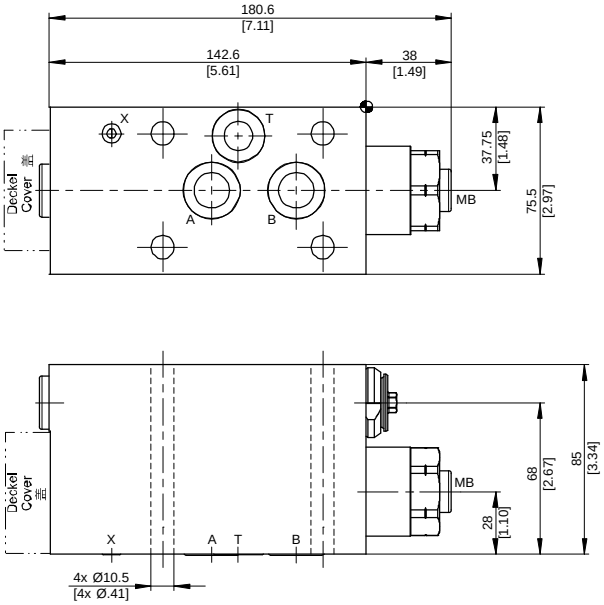

7.2 Interface drawing for mating face

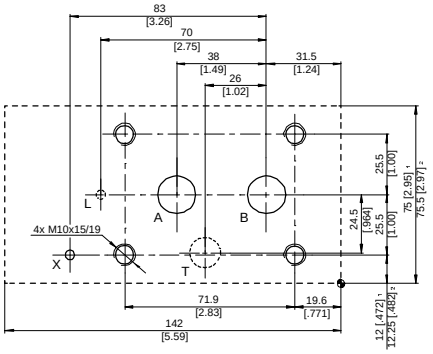

Anschlüsse T und L sind abhängig von derVarianten− Auswahl
Connections T and L are depend on the variant selection
T 口和 L 口取决于不同型号选择

1 ohne Sekundärdruckbegrenzungsventil 2 mit SVA / SVT
1 without secondary pressure relief valve 2 with SVA / SVT
1 不带溢流阀 2 带二级溢流阀 (SVA / SVT)

Anschlüsse Connections 连接方式	Anschluss Grösse Connection size 连接尺寸	O−Ring amVentil O−Ring on the valve 阀上的O型圈
A	max. Ø 16 [Ø 0.62]	20.29 x 2.62
B	max. Ø 16 [Ø 0.62]	20.29 x 2.62
T	max. Ø 13 [Ø 0.51]	18.72 x 2.62
X	max. Ø 4 [Ø 0.15]	5.28 x 1.78
L	max. Ø 4 [Ø 0.15]	5.28 x 1.78

Erforderliche Oberfläche des Gegenstücks:
Required surface of the counterpart:
需要配对的表面:

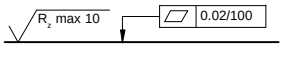

Toleranzen nach:
Tolerances according to:DIN ISO 2768−mK
公差基于:

8 Safety instructions

IMPORTANT!: Designing load-control valves requires specialist technical knowledge and product knowledge.
Safety applications must be verified by adequate tests to ensure safety in actual use.

8.1 Assembly / disassembly

IMPORTANT!:
The valve may only be used for its intended purpose within its nominal rating. If you plan to use it outside the nominal rating, you must contact the valve manufacturer. The ultimate responsibility for safety in the installation and use rests with the end-machine manufacturer of the mobile application.

IMPORTANT!:
Seal kit with the external seals is available on application.

IMPORTANT!:
The port threads conform to DIN 3852 T1.
Use screws to DIN 912, grade 12.9, to mount the valve.
Tightening torques as per the manufacturer's instructions.

IMPORTANT!:
Protect seals and flange faces from damage.
The mating flange face must be of the quality specified in the data sheet!
Pay attention to the port designations.

9 Application examples

9.1 Cylinder application

CINDY 16-B-P with the control version type “G“

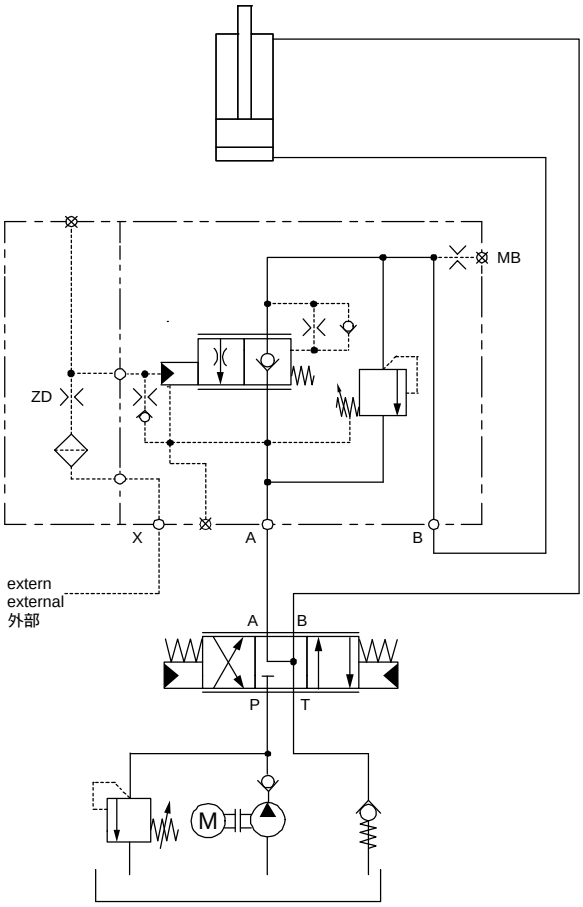

9.2 Motor application

CINDY 16-B-P with the control version type “K“

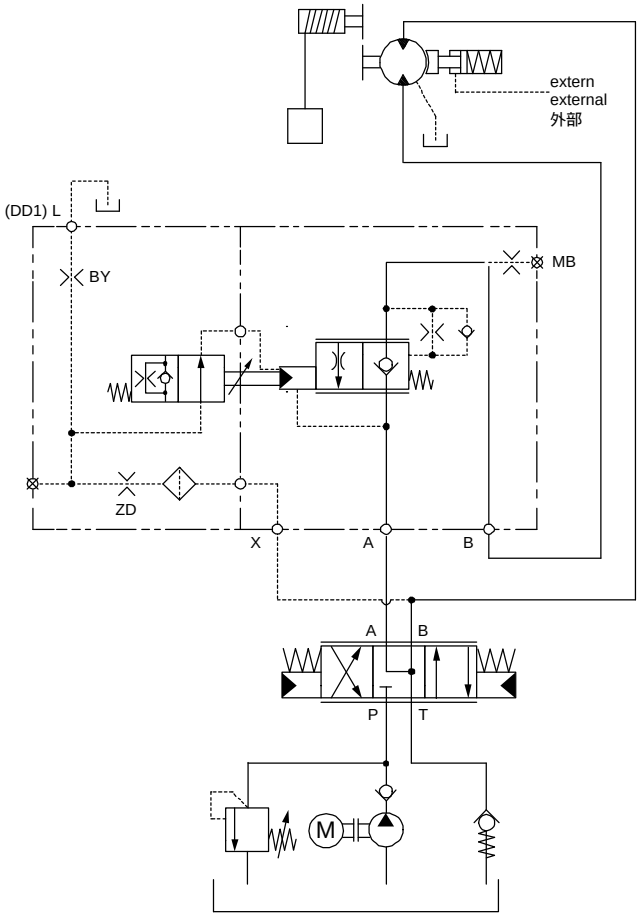

BUCHER
hydraulics

10 Ordering code

e.g. CINDY | 16 | – | B | – | P | N | O | – | S050 | – | A | – | G… | – | __ | – | ___ | – | …

CINDY	=	series
16	=	size 16
B	=	model / version
P	=	manifold mounting
N	=	NBR (Nitrile) seals **(standard)**
V	=	FKM (Viton) seals
T	=	MIL (low temperature) seals
O	=	without mounting screws **(standard)**
D	=	incl. mtg. screws Geomet (ZL) 12.9 DIN 912
S050	=	standard spool, B → A 50 l/min [13.20 gpm] *
S100	=	standard spool, B → A 100 l/min [26.41 gpm] *
S150	=	standard spool, B → A 150 l/min [39.61 gpm] *
S200	=	standard spool, B → A 200 l/min [52.82 gpm] *
S240	=	standard spool, B → A 240 l/min [63.40 gpm] *
A	=	influenced by return-line pressure in A
L	=	not influenced by return-line pressure
G…	=	standard damping cover
D…	=	stroke-dependent damping cover
K…	=	stroke-dependent damping cover with metering grooves
H…	=	hydromechanical stroke-limiting cover
...	=	orifice combination (is factory-defined)
(blank)	=	without secondary pressure relief
SVA	=	secondary pressure relief valve B → A
SVT	=	secondary pressure relief valve B → T
…	=	setting of the secondary pressure relief valve SVA 120…420 bar [1700…6000 psi] SVT 120…420 bar [1700…6000 psi]

*) measured at 33 bar [478 psi] Δp from B → A.

11 Related data sheets

Reference	Description
300-D-9050101	Technical design sheet for CINDY load-control valves in motor applications
300-D-9050102	Technical design sheet for CINDY load-control valves in cylinder applications

IMPORTANT!:
Additional documentation and 3D models (.stp or .igs format) can be downloaded from *www.bucherhydraulics.com*
(LOGintern area; registration is necessary)

We also offer customised solutions.
Please talk to our sales team.

info.ch@bucherhydraulics.com www.bucherhydraulics.com

© 2021 by Bucher Hydraulics AG, CH-6345 Neuheim
All rights reserved.
Data is provided for the purpose of product description only, and must not be construed as warranted characteristics in the legal sense. The information does not relieve users from the duty of conducting their own evaluations and tests. Because the products are subject to continual improvement, we reserve the right to amend the product specifications contained in this catalogue.

Classification: 430.325.360.315.330.325.305.310